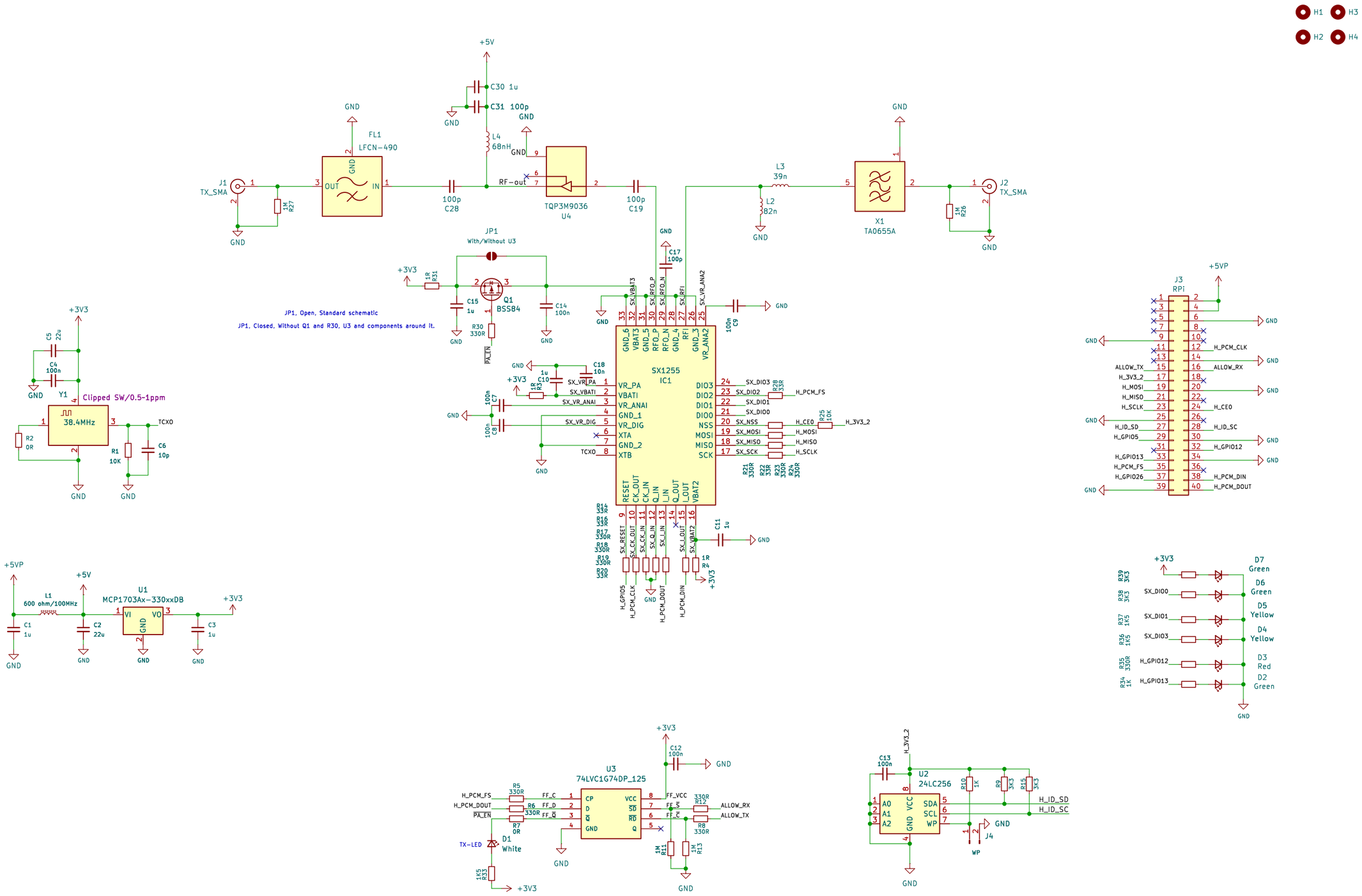

Modified SXceiver

Z321T

Sheet: /

File: HAT with RX-BPF_TX-LFP_SMA.kicad_sch

Title: HAT with LowPass & BandPass filters_SMA

Size: A3	Date: 2026-03-24	**Rev: V1.0**
KiCad E.D.A. 9.0.7		Id: 1/1